This copy may be copied for maintenance of Richter play equipment.

Instructions for wear checks of play equipment

The equipment must be checked for correct operation and safety, especially the points listed below:

Proof of maintenance

Playground .....

Date of installation .....

Checks depend on the type of equipment. Any equipment with moving parts must be checked at least twice a year, static equipment at least once a year.

Intervals for maintenance work and checks generally depend on

- location
- kind of use
- frequency of use
- possible vandalism

For more details see also "General instructions for maintenance of playgrounds".

Beam See-saw
Order No. 6.11600

Double See-saw
Order No. 6.11610

Twin See-saw
Order No. 6.11620

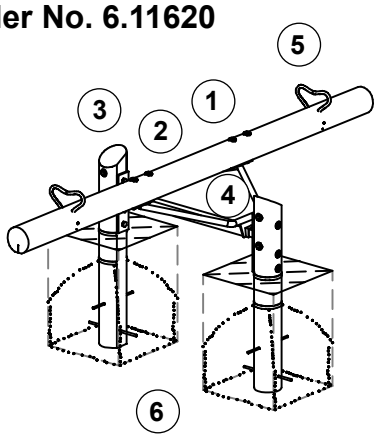

Note
If necessary, check tyres dug in on site (for shock absorption) for wear and tear, replace if required.

Wooden parts

1. Check for rot and, if necessary, smooth out splinters and round off sharp edges of cracks. ☐
2. Check that all bolts and screws are tight and retighten if necessary. ☐
3. **Recommendation**: apply paraffin wax to the upper end grain areas once a year, please refer to Order No. 0.90100, 1 litre. ☐

Rocking mechanism

4. Check for proper function and check for wear and tear, replace if necessary. ☐

Handles

5. Check for stability. ☐

Structural stability

6. In order to check for rot at wooden parts or steel feet for corrosion, uncover the foundations once a year. ☐

Special notes, e.g. for repairs

Repair not carried out, it is still possible to play on equipment	☐
Repair not carried out, equipment is taken out of action	☐
All work carried out, everything is in order	☐

Maintenance carried out by:

..... **Date** .....

COPYRIGHT © RICHTER SPIELGERÄTE GMBH

En-EN 25.09.2025

RICHTER SPIELGERÄTE GMBH · D-83112 FRASDORF · PHONE +49-8052/17980 · FAX 4180