Instructions for wear checks of play equipment

The equipment must be checked for correct operation and safety, especially the points listed below:

Proof of maintenance

Playground.....

Date of installation .....

Checks depend on the type of equipment. Any equipment with moving parts must be checked at least twice a year, static equipment at least once a year.

Intervals for maintenance work and checks generally depend on

- location
- usage
- frequency of use
- possible vandalism

For more details see also our general instructions for maintenance of playgrounds!

Wader Bird
Order No. 4.24286

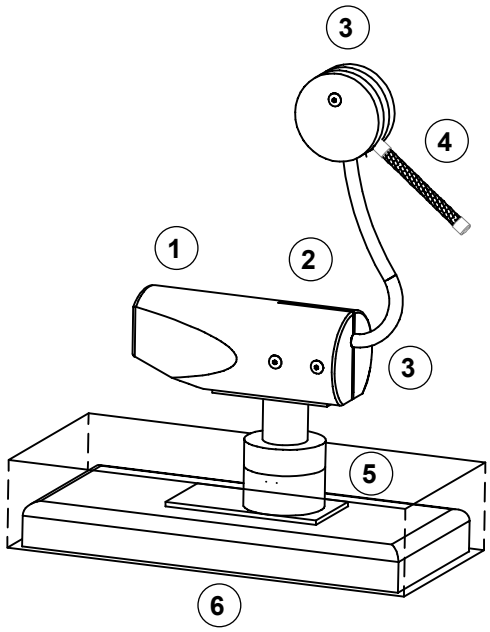

Wooden parts

1. Check for rot and, if necessary, smooth out splinters and round off sharp edges of cracks. ☐
2. Check that all bolts and screws are tight and retighten if necessary. ☐
3. **Recommendation**: apply paraffin wax to the upper end grain areas once a year, please refer to Order No. 0.90100, 1 litre. ☐

Rope beak

4. Check that ropes are securely connected and for intactness. ☐

Turning mechanism

5. Check that the mechanism moves smoothly. ☐

Structural stability

6. Examine the foundation by rocking the equipment once a year. ☐

Special notes, e.g. for repairs

Repair not carried out, it is still possible to play on equipment	☐	
Repair not carried out, equipment is taken out of action	☐	
All work carried out, everything is in order	☐	

Maintenance carried out by:

..... Date .....

En-EN 09.10.2023
COPYRIGHT © RICHTER SPIELGERÄTE GMBH